□□□□□□□□□□□□□PY-FR1200

□□□

□□□□□	324MHz□
□□□	□□□□□
□□	RS485
□□□□	ID□□□
□□□□	□□□□□□□□
□□□□	□□□
□□□□	12VDC
□□□□	0□45
□□□□□W * H * D□□□	50 * 102 * 37.3
□□□□	IP65
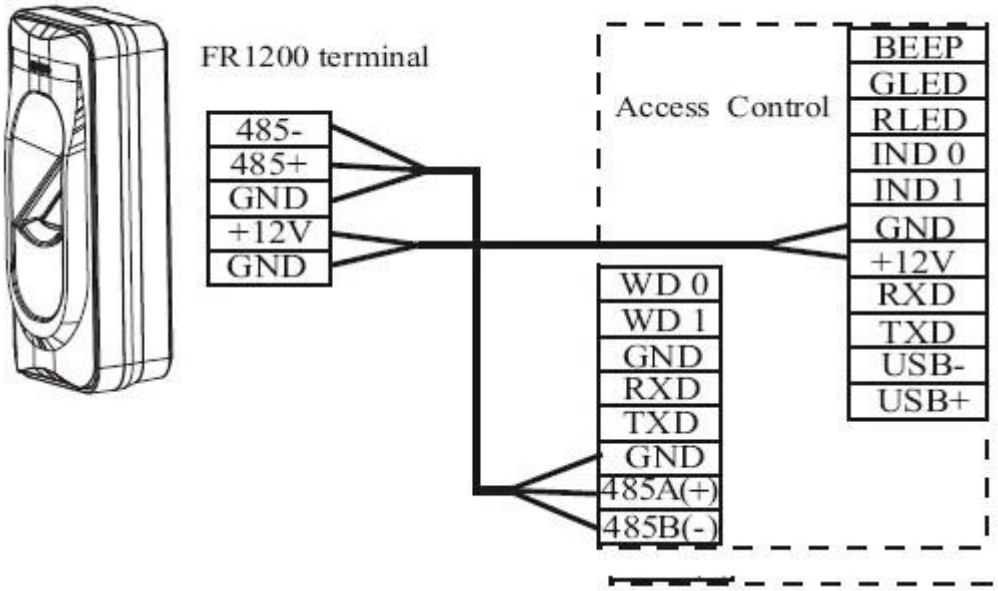
(2) Connection With Standalone Access Control