[illegible] Biometric Fingerprint [illegible] PY-3398

[illegible]: [illegible];

[illegible]: [illegible]; PVD [illegible];

[illegible]:

[illegible]
[illegible] 3 [illegible] [illegible] [illegible], [illegible] [illegible]; [illegible] [illegible]
[illegible] 120 [illegible] 1;
[illegible];
[illegible]: [illegible] PCB [illegible] [illegible] PCB;
[illegible]: [illegible];
[illegible] [illegible]
[illegible]; [illegible] [illegible];
[illegible] / [illegible]: [illegible] 1.5V [illegible] AA [illegible]; [illegible] 6V ~ 9V [illegible] [illegible]
[illegible]: [illegible] [illegible]
[illegible]: [illegible] [illegible]

[illegible]

[illegible]	[illegible] 120 [illegible] 1 [illegible]
[illegible]	[illegible]
[illegible]	[illegible]
[illegible]	[illegible] 1 [illegible]
[illegible]	1: [illegible]
FRR	≤ 1%
FAR	≤0.0001%
[illegible]	[illegible]
[illegible]	30 [illegible] CMOS
[illegible]	500 DPI
[illegible]	4H [illegible] 20 [illegible]. [illegible] 1000 [illegible] [illegible]
[illegible]	& lt; 10μA
[illegible]	& lt; 200 mA
[illegible]	[illegible] 1.5V [illegible], 6 [illegible] DC
[illegible] [illegible]	[illegible] ([illegible] 4.5V)
[illegible]	[illegible] 5 [illegible]

□□□□□□□□□□□

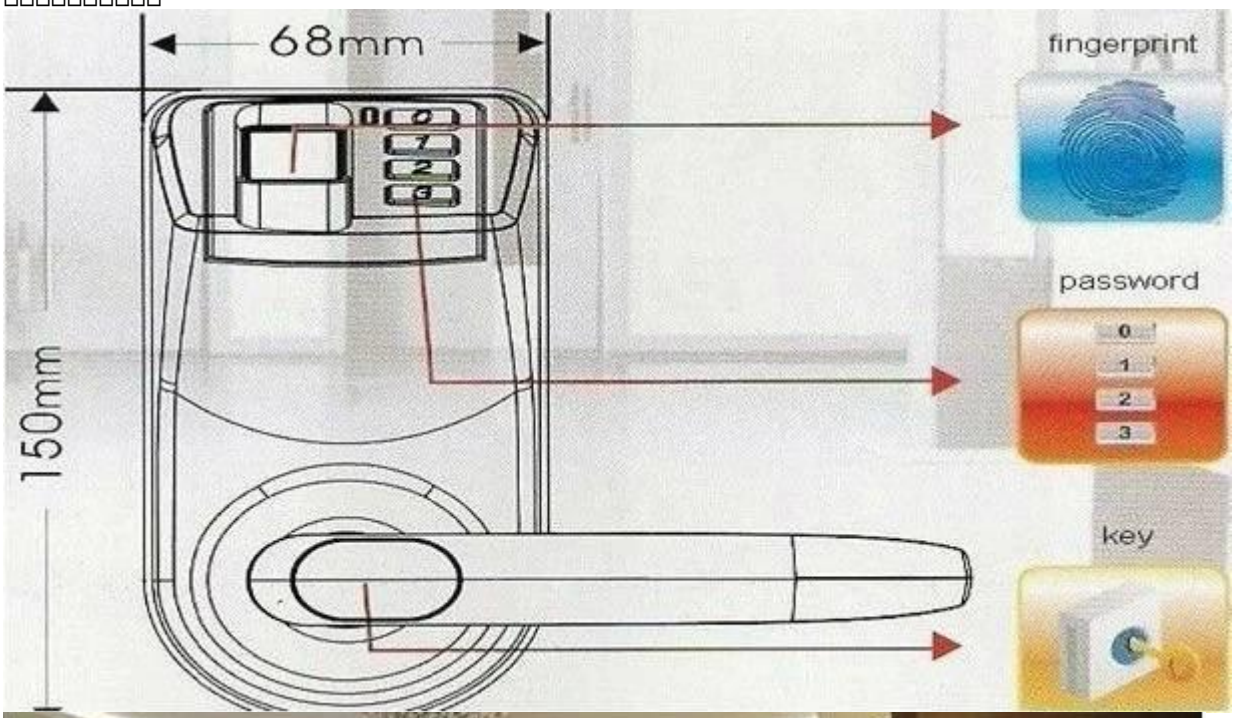
68mm
150mm
fingerprint
password
key